Keg Coupler

S System With Stainless Steel Body & Stainless Steel Probe

C704

ItemNo.	Part No.	Part Name	Qty.
1	C704.10	Short Handle	1
2	C704.50	S System Probe & Ball Retainer Sub-Assembly	1
3	C704.03	Coupler Body O-Ring	2
4	C704.04	S System Probe Seal	1
5	C704.05	Shanky Bottom Seel	1
6	C704.08	Check Valve	1
7	C704.09	Handle Hinge Pin	1
8	C704.11	Gas Hose Nipple	1
9	C712.13	PRV	1
10	C181	CHROME PLATED BRASS BEER HEX NUT	1

Revision # 01 - ---

Copyright © 2017 Krome Dispense. All Rights Reserved

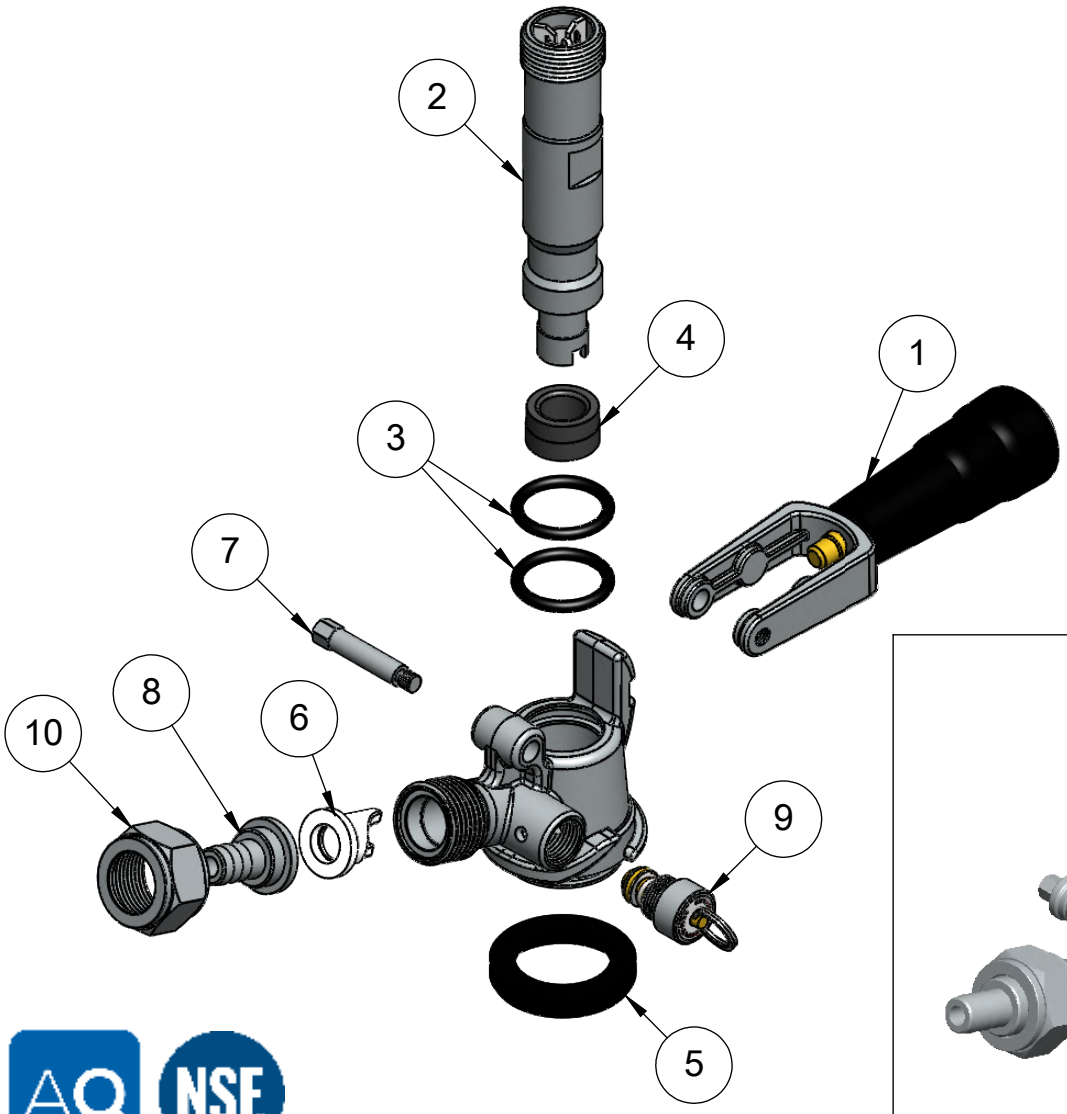

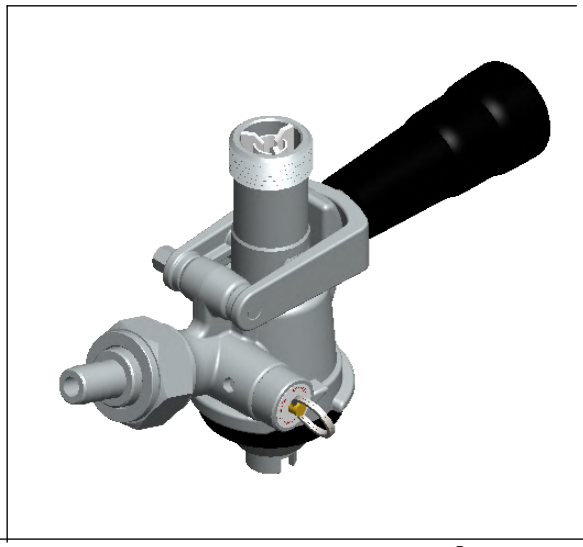

US & Canada :- +1-678 666 2001
Asia:- +91-9814203010

Krome Dispense reserves the right to make revisions to product specifications without any notice
For most updated specification sheet , go to www.kromedispense.com